DO NOT SCALE	METRIC	THIRD ANGLE PROJECTION
DIMENSIONS IN mm		

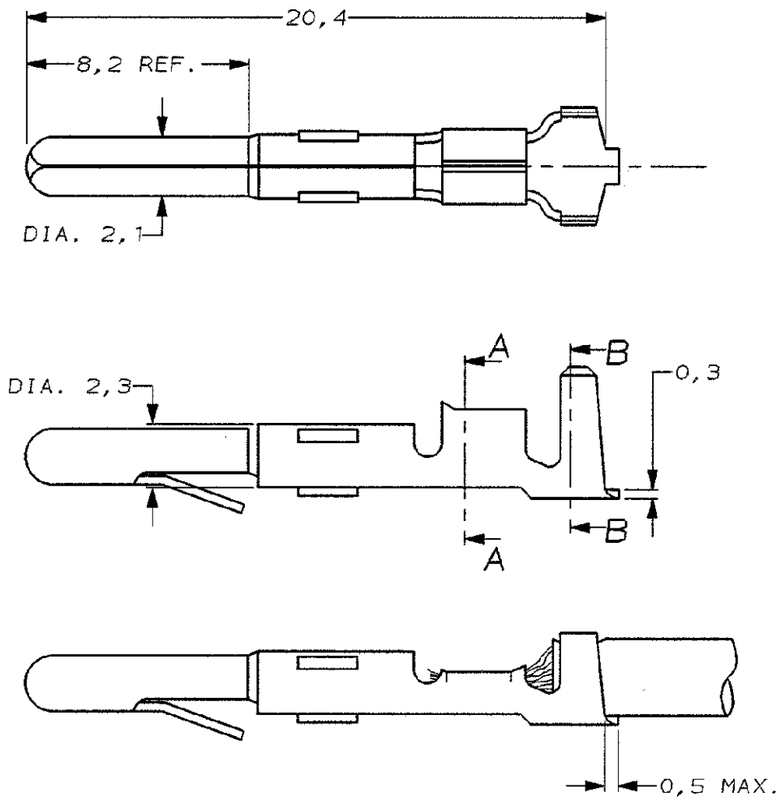

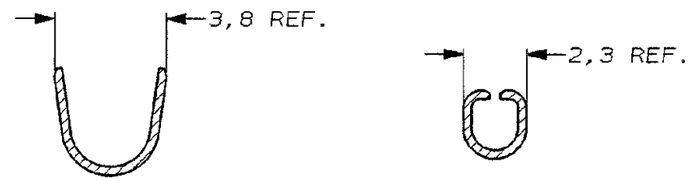

SECTION B-B

SECTION A-A

WIRE RANGE : 1,0-2,5 mm
INSULATION RANGE : 2,9 MAX. DIA.

	-	-	-
		-	-
	-	-	-
	-	-	-
	-	-	-
	-	-	-
	-	-	-
	-	-	-
	-	-	-
	PRE-TINPLATED	PHOSPHOR BR.	163307-4
	UNPLATED	PHOSPHOR BR.	163307-3
	PRE-TINPLATED	BRASS	163307-2
	UNPLATED	BRASS	163307-1
-	PLATING	MATERIAL	PARTNUMBER

LTR.	REVISION RECORD	DR.	CHK.	DATE
-	-	-	-	-
-	-	-	-	-
-	-	-	-	-
-	-	-	-	-
-	-	-	-	-
-	-	-	-	-
-	-	-	-	-
D	EH-1221-96	JvL	AB	24-10-96

CUSTOMER DRAWING — FOR REFERENCE ONLY WILL NOT BE UPDATED

DR.: J.v.LIEMPT	CHK.: A.BIJNEN.	APP.: M.v.DRIEL	DWG.No. C-163307		REV.LTR. D	SHEET 1 OF 1	A3
DATE: 24 OCT 96	DATE: -	DATE: -					

R6-210 (REV.04-91)

8 7 6 5 4 3 2 1

F E D C B A